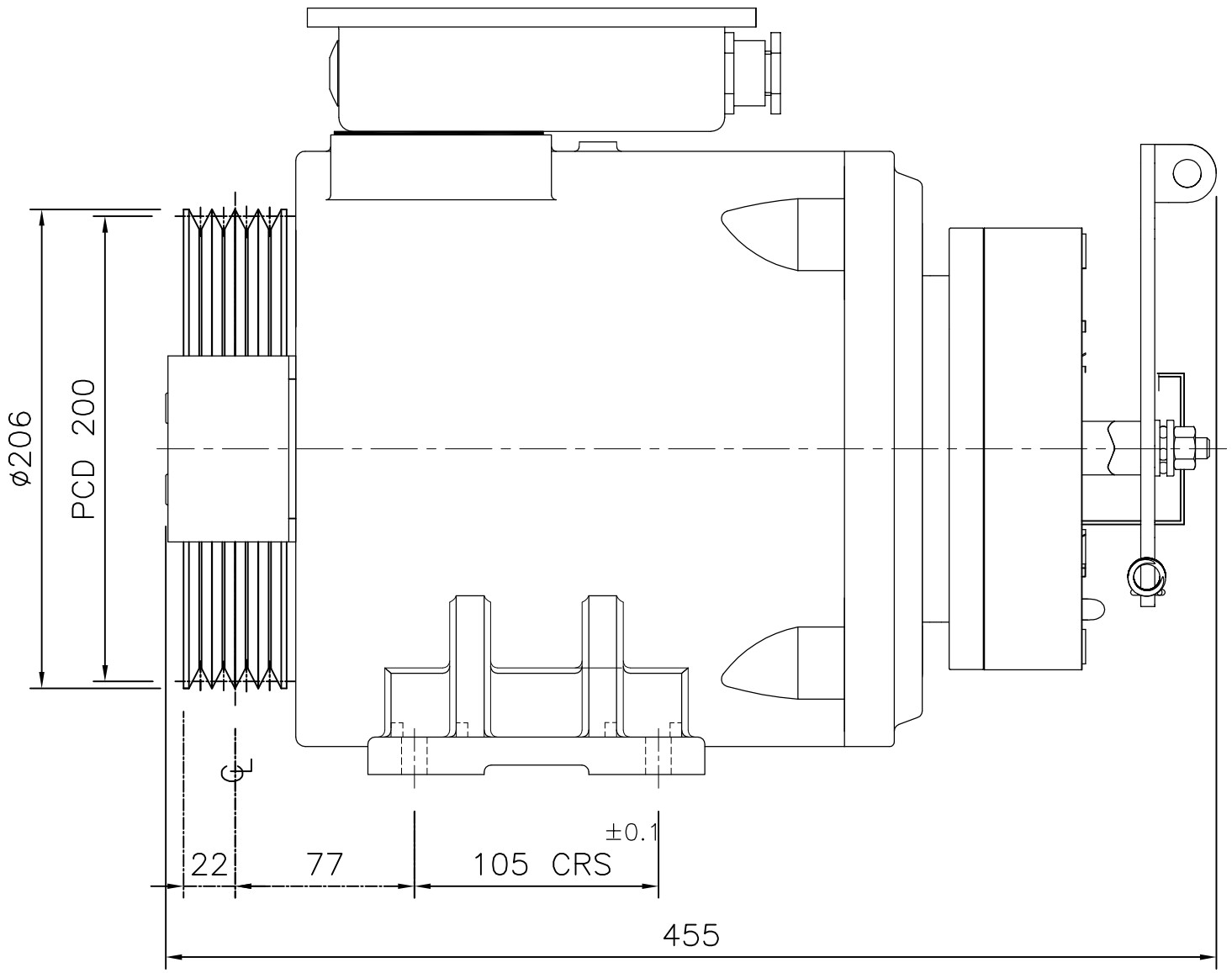

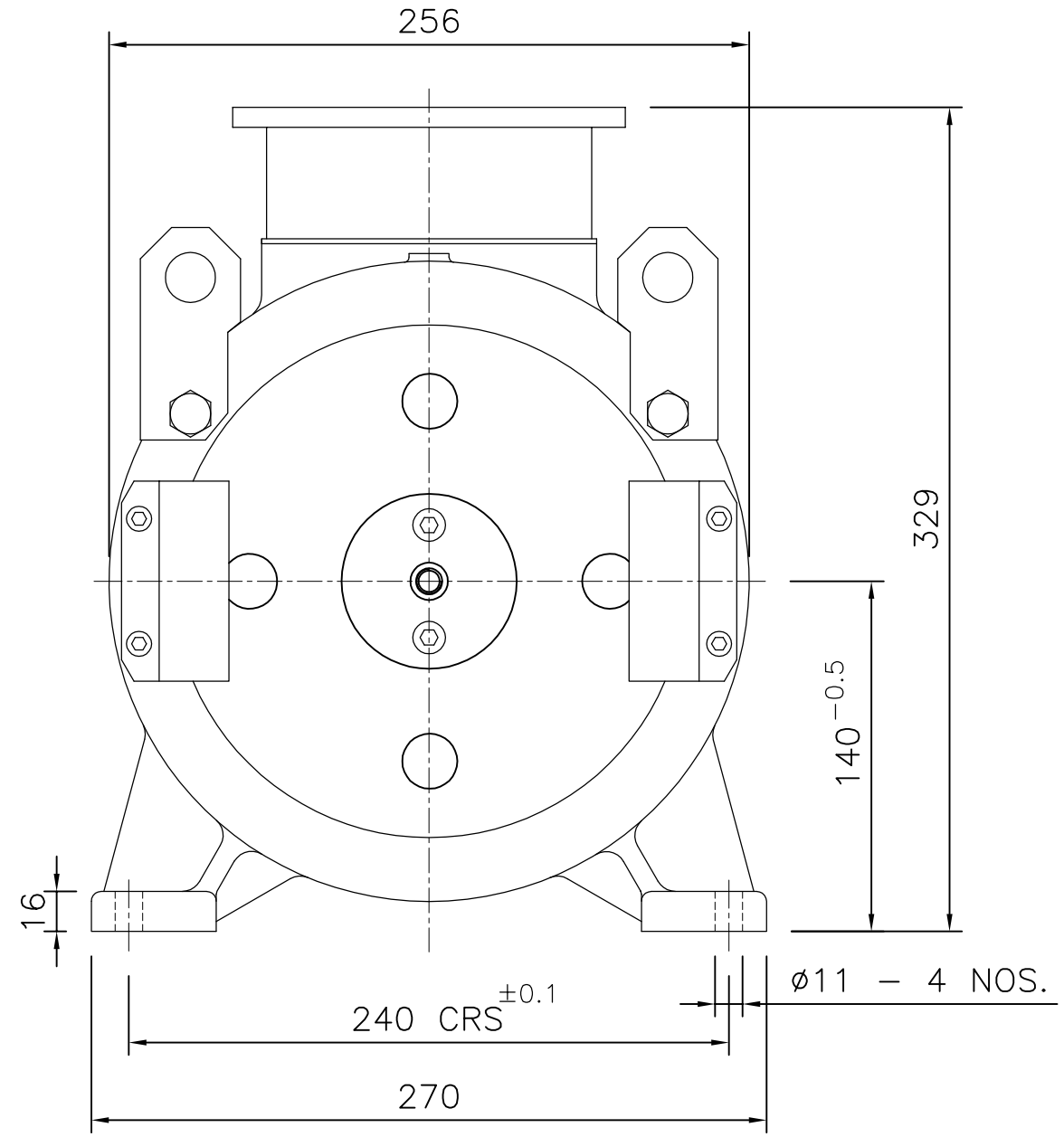

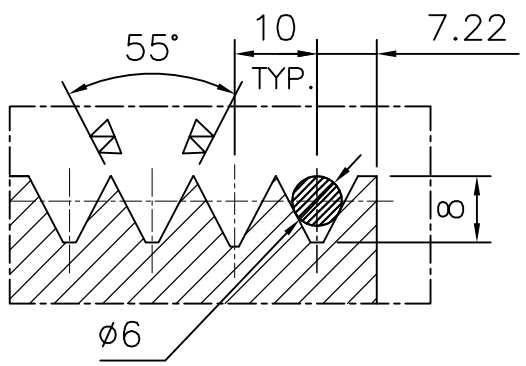

GROOVE DETAILS

NOTE :– ALL DIMENSIONS ARE IN MM

NO. OFF	DESCRIPTION	ITEM NO.	CODE NO.	MATL.	DRG.NO.	PATTERN NO. OR SIZE	WT. kg

AMENDMENT: D, C, B, A

	NAME	DATE	APPD.
DRN.	B.D.T.	17.02.16	
CHD.			

TITLE: ODD – HOME LIFT

CODE NO.: X260236

BHARAT BIJLEE LTD.
KALWA – THANE

DRG. NO. 4ES–02–1298

ASSY.DRG.NO. 3ES–02–1219

NO. OF SHEET

ALL DIMENSIONS ARE IN mm. UNLESS OTHERWISE SPECIFIED. ▽▽▽FINE FINISH MACHINING (GRINDING) ▽▽MEDIUM FINISH MACHINING ▽ROUGH MACHINING