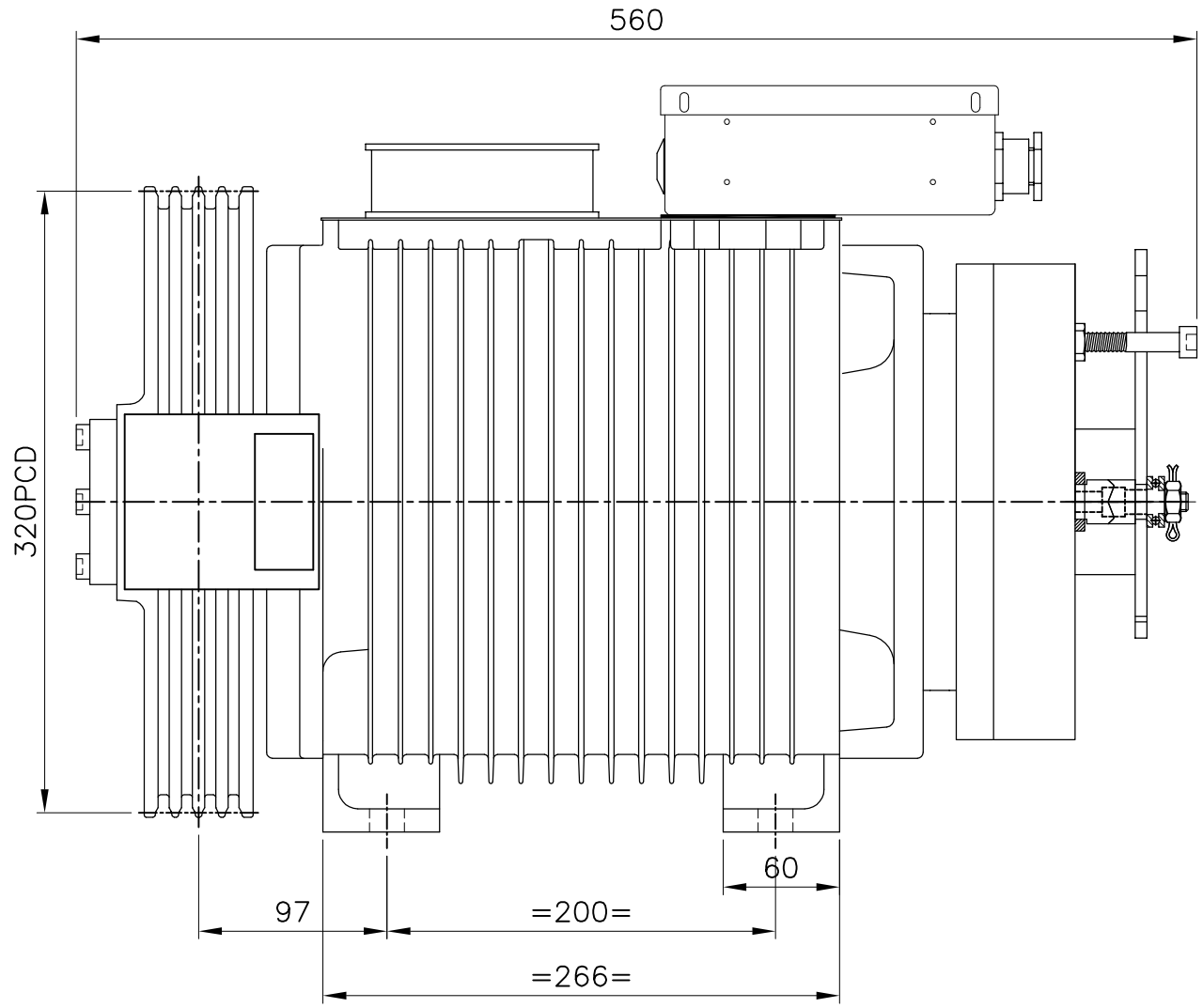

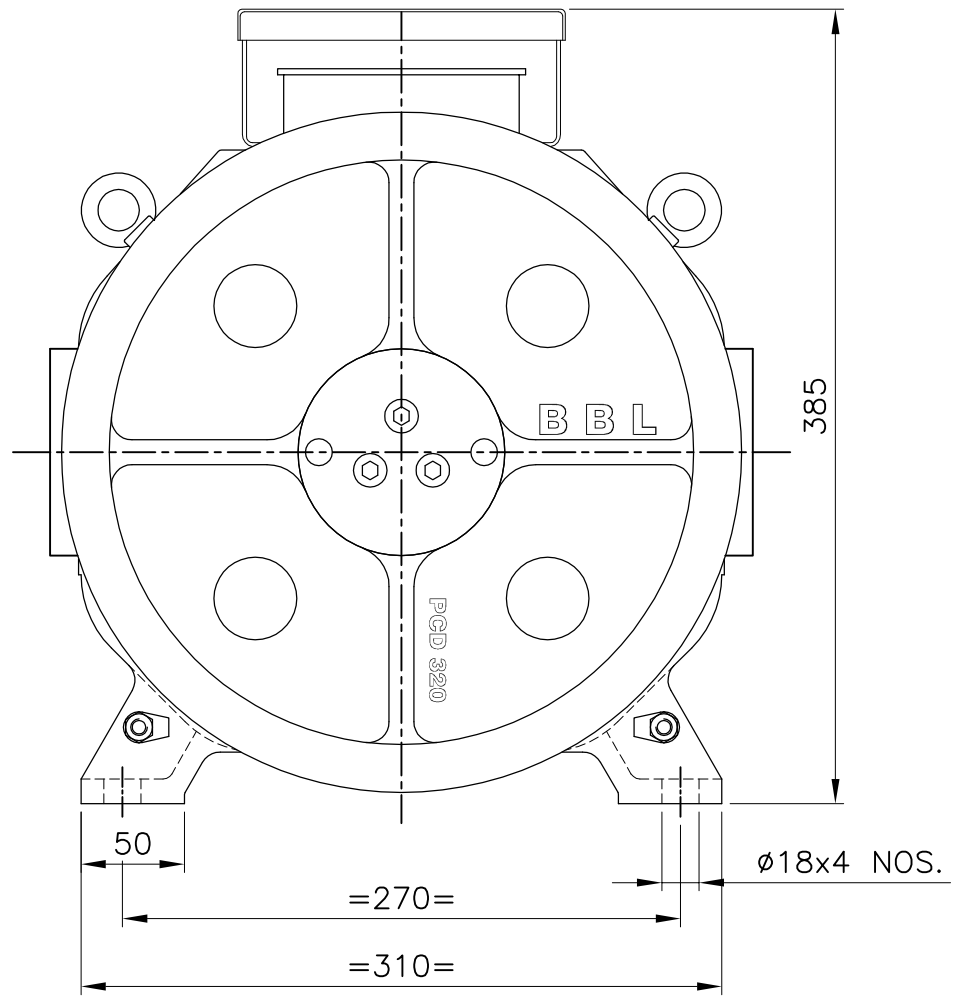

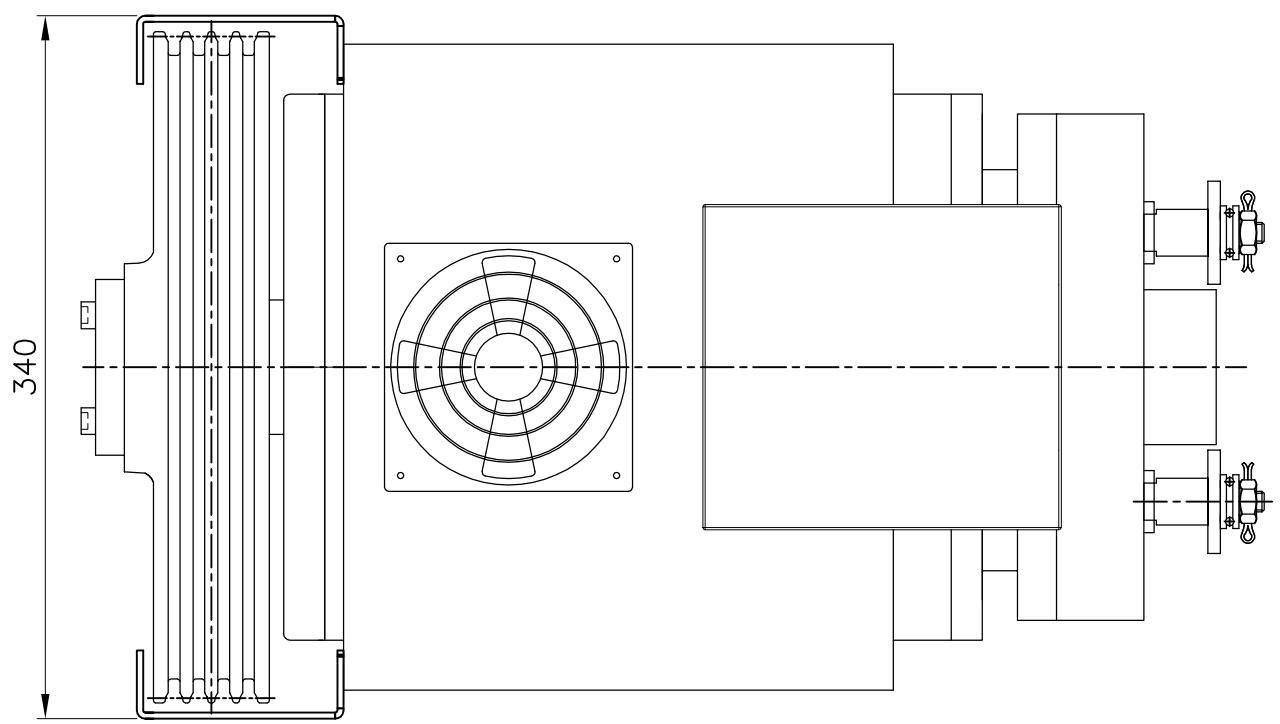

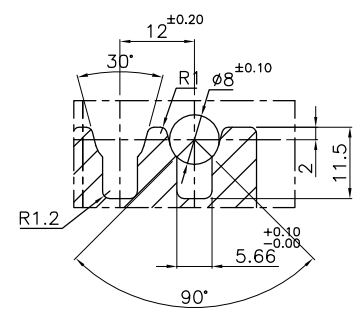

GROOVE DETAILS

NOTE :– ALL DIMENSIONS ARE IN MM

NO. OFF	DESCRIPTION	ITEM NO.	CODE NO.	MATL.	DRG.NO.	PATTERN NO. OR SIZE	WT. kg

AMENDMENT: D, C, B, A

	NAME	DATE	APPD.
DRN.	B.D.T.	25.07.16	R.R.
CHD.	V.S.P.	25.07.16	

TITLE: ODD – GC 08

FOR ø320 PCD PULLEY ø8 x 4 GROOVES

CODE NO.

BHARAT BIJLEE LTD.
KALWA – THANE

DRG. NO. 3ES–02–1566

ASSY.DRG.NO.

NO. OF SHEET

NOTE :– VIEWS SHOWN WITHOUT BODY COVER

ALL DIMENSIONS ARE IN mm. UNLESS OTHERWISE SPECIFIED. ▽▽▽FINE FINISH MACHINING (GRINDING) ▽▽MEDIUM FINISH MACHINING ▽ROUGH MACHINING